# 12600 liter tank in Acid-proof 316

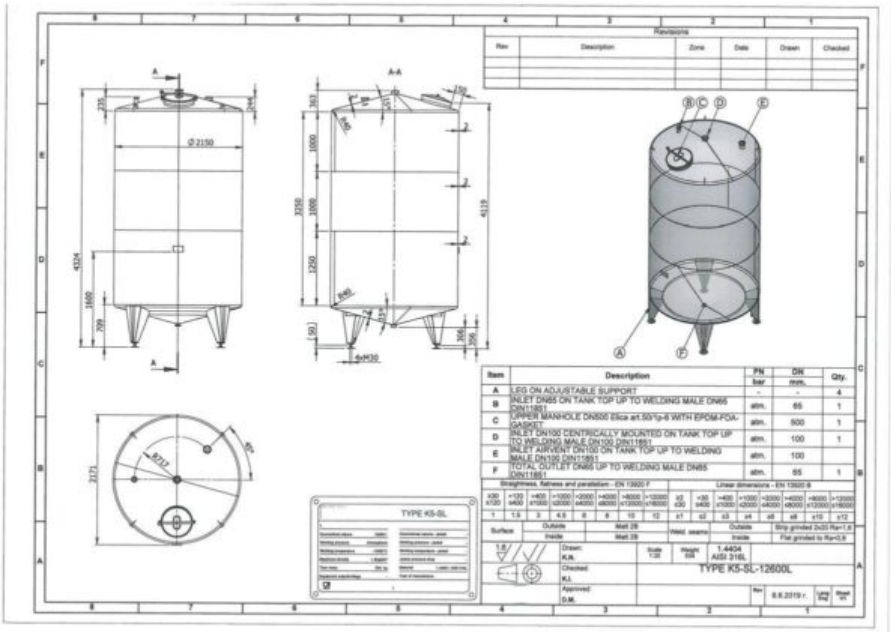


186 000 SEK /st exkl moms

**item available on order**

**Article type**: brand new storage tank - type K5-SL
**Additional information**: inner surface 0.8µ
**Volumetric volume (L)**: 12.600 L
**Max. density P (kg/m³)**: 1.200
**Ra inner weld**: 0,80

**Finish stainless steel**: 2B
**Pressure in tank**: ATM - atmosferic
**Max. temperature (°C)**: 100 °C
**Min. temperature (°C)**: -10 °C

**PROCESSÖVERSKOTT AB**

Rodervägen 57
891 78 Bonässund
info@processoverskott.se

Läs våra köpvillkor

**Material wet parts**: SS AISI 316L (V4A)

**Model**: vertical
**Configuration**: single-skin
**Heat exchanger**: no
**Insulation**: no
**Mobile tank**: no

**Top type**: conical 15 °
**Shape of tank**: cylindrical
**Bottom type**: conical 15 °
**Total discharge**: yes
**Fixation points**: 4 adjustable feet

**Manway(s)**: RVS 316
**Gasket manway(s)**: EPDM
**Fixation point(s)**: RVS 304L
**Suitable for food industry**: yes
**Documents included**: yes, optional

**Technical drawing included**: yes
**Registration plate on the tank**: yes
**Inspection of**: TUV
**Flange for agitator**: no
**Number of manways**: 1

**Position of manway**: at the top
**Height manhole 1 (mm)**: 500 mm
**CIP spray ball**: no, optional
**Tank outlet**: inside Ø 65 mm
**Outlet type**: DIN11851 male

**Total outlet valve**: no, optional
**Agitator**: no, optional
**Top**: 2 mm
**Cylinder**: 2 mm
**Bottom**: 2 mm

**Distance from outlet to ground**: 356 mm
**Outer diameter tank**: 2.150 mm

**PROCESSÖVERSKOTT AB**

Rodervägen 57
891 78 Bonässund
info@processoverskott.se

Läs våra köpvillkor

**Cylinder height**: 3.250 mm
**Height of top**: 363 mm
**Feet height**: 709 mm

**Total height of tank**: 4.320 mm
**Empty weight tank**: 600

**SKU:** 381230

## Mer information

**PROCESSÖVERSKOTT AB**

Rodervägen 57
891 78 Bonässund
info@processoverskott.se

## Product Description

Food-grade: Yes
Material: Acid-resistant 316
Model: Vertical
New / Used: Newly manufactured
Operating Pressure in Tank: ATM – atmospheric
Stainless steel finish: 2b
Configuration: single-skin
Max. Service Temperature: 100 °C
Maximum Product Density: 1200
Min. Operating Temperature: -10 °C
Mobile Tank: No, it is not.
Övrig information: inner surface 0.8µ
Agitator: No
Ra Internal Weld: 0,80
Tank Shape: cylindrical
Complete Drainage: Yes
Bottom Type: conical 15 °
Heating / Cooling: No
Contact Surface: SS AISI 316L (V4A)
Volume in liters: 12600

## Equipment

Agitator flange: No
Nameplate: Yes
Food-grade: Yes
Inspected by: TUV
Tank Outlet: inside Ø 65 mm
Technical Drawing Available: Yes
Outlet Type: DIN11851 male

## Material Overview

Material: Acid-resistant 316
Fixing point(s): RVS 304L

**PROCESSÖVERSKOTT AB**

Rodervägen 57
891 78 Bonässund
info@processoverskott.se

Läs våra köpvillkor

**Tank Dimensions**

Cylinder Height: 3.250 mm
Height on legs: 709 mm
Outlet Height to Ground: 356 mm
Total Height: 4,320 mm
Outer diameter: 2,150 mm

**Tjocklek på tank**

Bottom: 2 mm
Cylinder: 2 mm
Top: 2 mm

**Mer**

Isolated: No
Weight: 600

**PROCESSÖVERSKOTT AB**

Rodervägen 57
891 78 Bonässund
info@processoverskott.se

Läs våra köpvillkor