1330 liter tank in Acid-proof 316

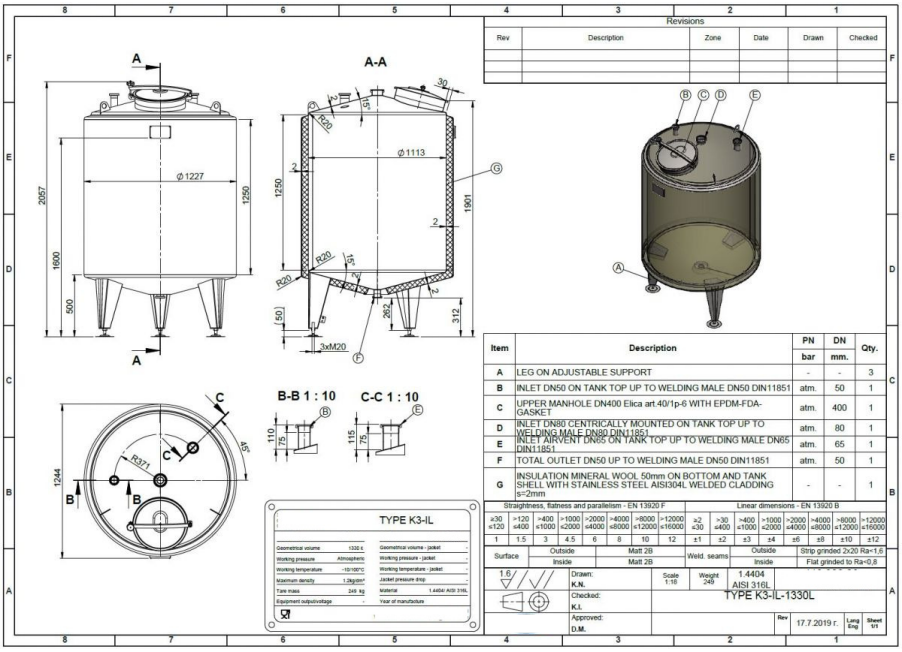

113 000 SEK /st exkl moms

item available on order

Article type: brand new storage tank - type K3-IL
Volumetric volume (L): 1.330 L
Max. density P (kg/m³): 1.200
Ra inner weld: 0,80
Finish stainless steel: 2B

Pressure in tank: ATM - atmosferic
Max. temperature (°C): 100 °C
Min. temperature (°C): -10 °C
Material wet parts: SS AISI 316L (V4A)

PROCESSÖVERSKOTT AB

Rodervägen 57
891 78 Bonässund
info@processoverskott.se

Läs våra köpvillkor

Model: vertical

Configuration: insulated
Heat exchanger: no
Insulation: yes
Mobile tank: no
Top type: conical 15 °

Shape of tank: cylindrical
Bottom type: conical 15 °
Total discharge: yes
Fixation points: 3 adjustable feet
Insulation material: Rockwool

Outer jacket (ornamental wall): RVS 304
Manway(s): RVS 316
Gasket manway(s): EPDM
Fixation point(s): RVS 304
Suitable for food industry: yes

Documents included: yes, optional
Technical drawing included: yes
Registration plate on the tank: yes
Inspection of: TUV
Flange for agitator: no

Number of manways: 1
Position of manway: at the top
Height manhole 1 (mm): 400 mm
CIP spray ball: no, optional
Tank outlet: inside Ø 50 mm

Outlet type: DIN11851
Total outlet valve: no, optional
Agitator: no, optional
Top: 2 mm
Cylinder: 2 mm

Bottom: 2 mm
Cylinder: 2

PROCESSÖVERSKOTT AB

Rodervägen 57
891 78 Bonässund
info@processoverskott.se

Läs våra köpvillkor

Insulation body: yes
Bottom: 2
Insulation bottom/sides: yes

finish of the outer jacket: welded
Insulation thickness: 50
Internal diameter tank: 1.113 mm
Distance from outlet to ground: 312 mm
Outer diameter tank: 1.227 mm

Cylinder height: 1.250 mm
Feet height: 500 mm
Total height of tank: 2.057 mm
Empty weight tank: 249

SKU: 384470

Mer information

PROCESSÖVERSKOTT AB

Rodervägen 57
891 78 Bonässund
info@processoverskott.se

Läs våra köpvillkor

Product Description

Food-grade: Yes
Material: Acid-resistant 316
Model: Vertical
New / Used: Newly manufactured
Operating Pressure in Tank: ATM – atmospheric
Stainless steel finish: 2b
Configuration: insulated
Max. Service Temperature: 100 °C
Maximum Product Density: 1200
Min. Operating Temperature: -10 °C
Mobile Tank: No, it is not.
Agitator: No
Ra Internal Weld: 0,80
Tank Shape: cylindrical
Complete Drainage: Yes
Bottom Type: conical 15 °
Heating / Cooling: No
Contact Surface: SS AISI 316L (V4A)
Volume in liters: 1330

Equipment

Agitator flange: No
Nameplate: Yes
Food-grade: Yes
Inspected by: TUV
Tank Outlet: inside Ø 50 mm
Technical Drawing Available: Yes
Outlet Type: DIN11851

Material Overview

Material: Acid-resistant 316
Fixing point(s): RVS 304
Insulation material: Rockwool
Exterior cladding: RVS 304

Rodervägen 57
891 78 Bonässund
info@processoverskott.se

Tank Dimensions

Cylinder Height: 1.250 mm
Height on legs: 500 mm
Internal diameter: 1.113 mm
Outlet Height to Ground: 312 mm
Total Height: 2,057 mm
Outer diameter: 1.227 mm

Tjocklek på tank

Bottom: 2 mm
Cylinder: 2 mm
Top: 2 mm

Outer Cladding and Insulation Thickness

External jacket finish: welded
Insulation bottom/end caps: Yes
Jacket insulation: Yes
Insulation material: Rockwool

Mer

Cylinder OW: 2
Bottom OW: 2
Insulation Thickness OW: 50
Isolated: Yes
Weight: 249

PROCESSÖVERSKOTT AB

Rodervägen 57
891 78 Bonässund
info@processoverskott.se

Läs våra köpvillkor