1330 liter tank in Acid-proof 316

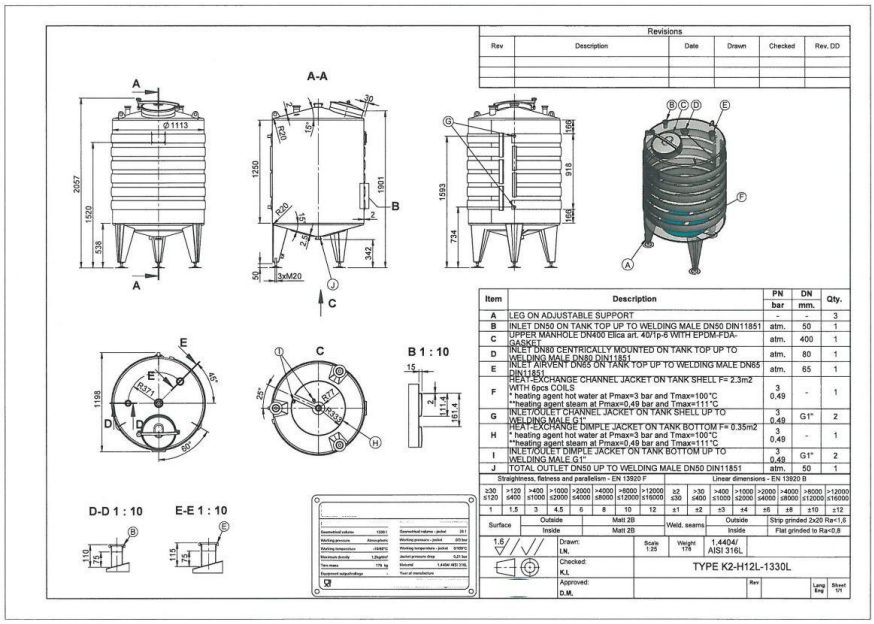

88 000 SEK /st exkl moms

item available on order

Article type: brand new storage tank - type K2-H12L
Volumetric volume (L): 1.330 L
Max. density P (kg/m³): 1.200
Ra inner weld: 0,80
Finish stainless steel: 2b

Pressure in tank: ATM - atmosferic
Max. temperature (°C): 100 °C
Min. temperature (°C): -10 °C
Material wet parts: SS AISI 316L (V4A)

PROCESSÖVERSKOTT AB

Rodervägen 57
891 78 Bonässund
info@processoverskott.se

Läs våra köpvillkor

Model: vertical

Configuration: single jacketed with heat-exchanger
Heat exchanger: yes
Insulation: no
Mobile tank: no
Top type: conical 15 °

Shape of tank: cylindrical
Bottom type: conical 15 °
Total discharge: yes
Fixation points: 3 adjustable feet
Legs: Set of baseplates and adjusting pieces included

Type of HE on the cylinder: half pipe welded onto the outside of the innertank
Position HE: the complet cilinder
Number of sections: 1
with windings: 4
Water pressure HE: 3 Bar

Steam pressure HE: 0,49 Bar
Hydraulic test pressure: 4,50 Bar
Contact surface cylinder: 1,68 m²
Connection HE: 1"BSP male
Working temperature HE cylinder: 111 °C

Type of HE on the bottom: dimple-jacket
Water pressure HE: 3 Bar
Steam pressure HE: 0,49 Bar
Hydraulic test pressure: 4,50 Bar
Contact surface bottom: 0,40

Connection HE: 1"BSP male
Working temperature HE bottom: 111 °C
Heat exchanger: RVS 304
Manway(s): RVS 316
Gasket manway(s): EPDM

Fixation point(s): RVS 304L
Suitable for food industry: yes

PROCESSÖVERSKOTT AB

Rodervägen 57
891 78 Bonässund
info@processoverskott.se

Läs våra köpvillkor

Documents included: yes, optional
Technical drawing included: yes
Registration plate on the tank: yes

Inspection of: TUV
Flange for agitator: no
Number of manways: 1
Position of manway: headside
Height manhole 1 (mm): 400 mm

CIP spray ball: no, optional
Tank outlet: inside Ø 50 mm
Outlet type: DIN11851 male
Total outlet valve: no, optional
Agitator: no, optional

Top: 2 mm
Cylinder: 2 mm
Bottom: 2,50 mm
Distance from outlet to ground: 342 mm
Outer diameter tank: 1.113 mm

Cylinder height: 1.000 mm
Feet height: 550 mm
Total height of tank: 2.057 mm
Empty weight tank: 178

SKU: 378488

Mer information

PROCESSÖVERSKOTT AB

Rodervägen 57
891 78 Bonässund
info@processoverskott.se

Läs våra köpvillkor

Product Description

Food-grade: Yes
Material: Acid-resistant 316
Model: Vertical
New / Used: Newly manufactured
Operating Pressure in Tank:
Stainless steel finish: 2b
Configuration: single jacketed with heat-exchanger
Max. Service Temperature: 100 °C
Maximum Product Density: 1200
Min. Operating Temperature: -10 °C
Mobile Tank: No, it is not.
Agitator: No
Ra Internal Weld: 0,80
Tank Shape: cylindrical
Complete Drainage:
Bottom Type: conical 15 °
Heating / Cooling: Yes
Contact Surface: SS AISI 316L (V4A)
Volume in liters: 1330

Equipment

Agitator flange: No
Nameplate: Yes
Food-grade: Yes
Inspected by: TUV
Tank Outlet: inside Ø 50 mm
Technical Drawing Available: Yes
Outlet Type: DIN11851 male

Material Overview

Material: Acid-resistant 316
Fixing point(s): RVS 304L

PROCESSÖVERSKOTT AB

Rodervägen 57
891 78 Bonässund
info@processoverskott.se

Läs våra köpvillkor

Tank Dimensions

Cylinder Height: 1.000 mm
Height on legs: 550 mm
Outlet Height to Ground: 342 mm
Total Height: 2,057 mm
Outer diameter: 1.113 mm

Heat exchangers

Vapor pressure heat exchanger: 0,49 bar
Vapor pressure heat exchanger bottom: 0,49 bar
Heat exchanger connection: 1"BSP male
Connection heat exchanger bottom: 1"BSP male
Operating Temperature Heat Exchanger Cylinder: 111 °C
Operating Temperature Heat Exchanger Bottom: 111 °C
Bottom hydrostatic test pressure: 4,50 bar
Hydrostatic test pressure: 4,50 bar
Bottom Contact Surface: 0,40
Cylinder Contact Surface: 1,68 m²
Position värmeväxlare: the complete cylinder
Type of Heat Exchanger on Cylinder: half pipe welded onto the outside of the innertank
Bottom Heat Exchanger Type: dimple jacket
Water Pressure Heat Exchanger: 3 bars
Water Pressure Heat Exchanger Bottom: 3 bars

Tjocklek på tank

Bottom: 2,50 mm
Cylinder: 2 mm
Top: 2 mm

Mer

Heat Exchanger: RVS 304
Isolated: No
Weight: 178

Rodervägen 57
891 78 Bonässund
info@processoverskott.se