1330 liter tank in Acid-proof 316

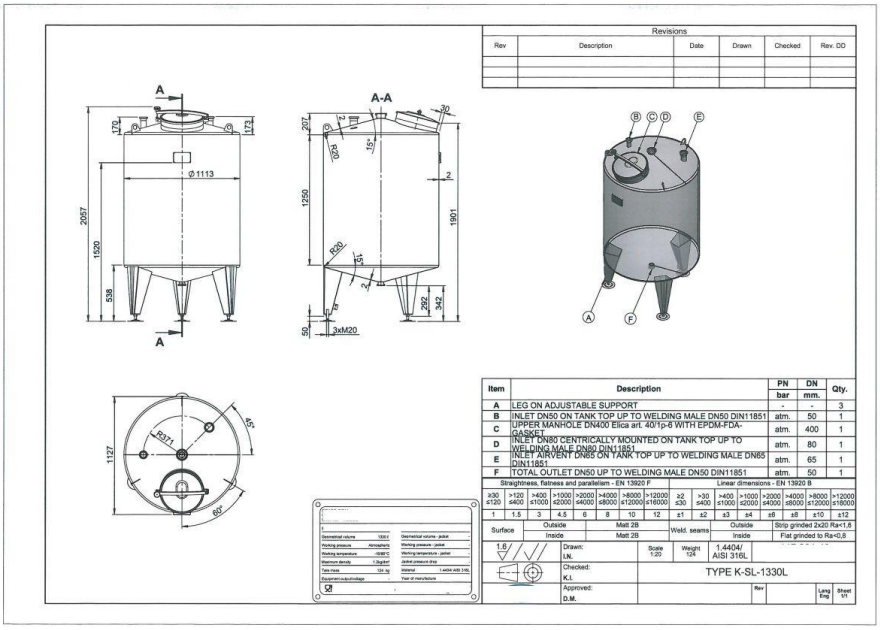

78 000 SEK /st exkl moms

item available on order

Article type: brand new storage tank - type K2-SL
Volumetric volume (L): 1.330 L
Max. density P (kg/m³): 1.200
Ra inner weld: 0,80
Finish stainless steel: 2b

Pressure in tank: ATM - atmosferic
Max. temperature (°C): 100 °C
Min. temperature (°C): -10 °C
Material wet parts: SS AISI 316L (V4A)

PROCESSÖVERSKOTT AB

Rodervägen 57
891 78 Bonässund
info@processoverskott.se

Läs våra köpvillkor

Model: vertical

Configuration: single-skin
Heat exchanger: no
Insulation: no
Mobile tank: no
Top type: conical 15 °

Shape of tank: cylindrical
Bottom type: conical 15 °
Total discharge: yes
Fixation points: 3 adjustable feet
Legs: Set of baseplates and adjusting pieces included

Gasket manway(s): EPDM
Fixation point(s): RVS 304L
Suitable for food industry: yes
Documents included: yes, optional
Technical drawing included: yes

Registration plate on the tank: yes
Inspection of: TUV
Flange for agitator: no
Number of manways: 1
Position of manway: at the top

Height manhole 1 (mm): 400 mm
CIP spray ball: no, optional
Tank outlet: inside Ø 50 mm
Outlet type: DIN11851 male
Total outlet valve: no, optional

Adjustable legs: yes
Agitator: no, optional
Top: 2 mm
Cylinder: 2 mm
Bottom: 2 mm

Distance from outlet to ground: 342 mm
Outer diameter tank: 1.113 mm

PROCESSÖVERSKOTT AB

Rodervägen 57
891 78 Bonässund
info@processoverskott.se

Läs våra köpvillkor

Cylinder height: 1.250 mm
Feet height: 538 mm
Total height of tank: 2.057 mm

Empty weight tank: 125

SKU: 379793

Mer information

Product Description

Food-grade: Yes
Material: Acid-resistant 316
Model: Vertical
New / Used: Newly manufactured
Operating Pressure in Tank: ATM – atmospheric
Stainless steel finish: 2b
Configuration: single-skin
Max. Service Temperature: 100 °C
Maximum Product Density: 1200
Min. Operating Temperature: -10 °C
Mobile Tank: No, it is not.
Agitator: No
Ra Internal Weld: 0,80
Tank Shape: cylindrical
Complete Drainage: Yes
Bottom Type: conical 15 °
Heating / Cooling: No
Contact Surface: SS AISI 316L (V4A)
Volume in liters: 1330

Rodervägen 57
891 78 Bonässund
info@processoverskott.se

Equipment

Agitator flange: No
Nameplate: Yes
Food-grade: Yes
Inspected by: TUV
Tank Outlet: inside Ø 50 mm
Technical Drawing Available: Yes
Outlet Type: DIN11851 male

Material Overview

Material: Acid-resistant 316
Fixing point(s): RVS 304L

Tank Dimensions

Cylinder Height: 1.250 mm
Height on legs: 538 mm
Outlet Height to Ground: 342 mm
Total Height: 2,057 mm
Outer diameter: 1.113 mm

Tjocklek på tank

Bottom: 2 mm
Cylinder: 2 mm
Top: 2 mm

Mer

Isolated: No
Weight: 125

Rodervägen 57
891 78 Bonässund
info@processoverskott.se