2000 liter tank in Acid-proof 316

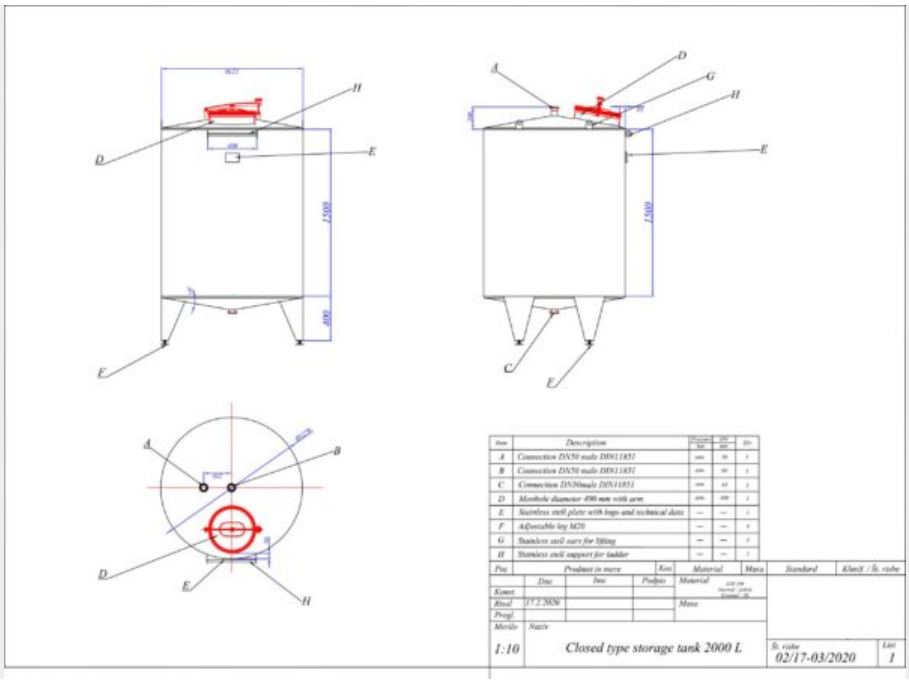

140 000 SEK /st exkl moms

Discover the 2000 liters tank in Syrafast 316 - a robust solution for industry. With a capacity of 2000 liters, made in Syrafast 316, brand new, long life is ensured. A smart choice for your business.

SKU: 478517

Rodervägen 57
891 78 Bonässund
info@processoverskott.se

Mer information

Product Description

Food-grade: Yes
Material: Acid-resistant 316
Model: Vertical
New / Used: Newly manufactured
Operating Pressure in Tank: ATM – atmospheric
Stainless steel finish: 2b
Mobile Tank: No, it is not.
Övrig information: These tanks have about 3 months delivery time.
Agitator: No
Tank Shape: cylindrical
Complete Drainage: Yes
Heating / Cooling: Yes
Contact Surface: SS AISI 316 (V4A)
Volume in liters: 2000

Equipment

Nameplate: Yes
Food-grade: Yes
Tank Outlet: inside Ø 60 mm
Outlet Type: DIN 11851

Material Overview

Material: Acid-resistant 316

Tank Dimensions

Cylinder Height: 1.500 mm
Height on legs: 400 mm
Total Height: 2.500 mm
Outer diameter: 1.270 mm

PROCESSÖVERSKOTT AB

Rodervägen 57
891 78 Bonässund
info@processoverskott.se

Läs våra köpvillkor

Mer
Isolated: Yes