# 2000 liter tank in Acid-proof 316

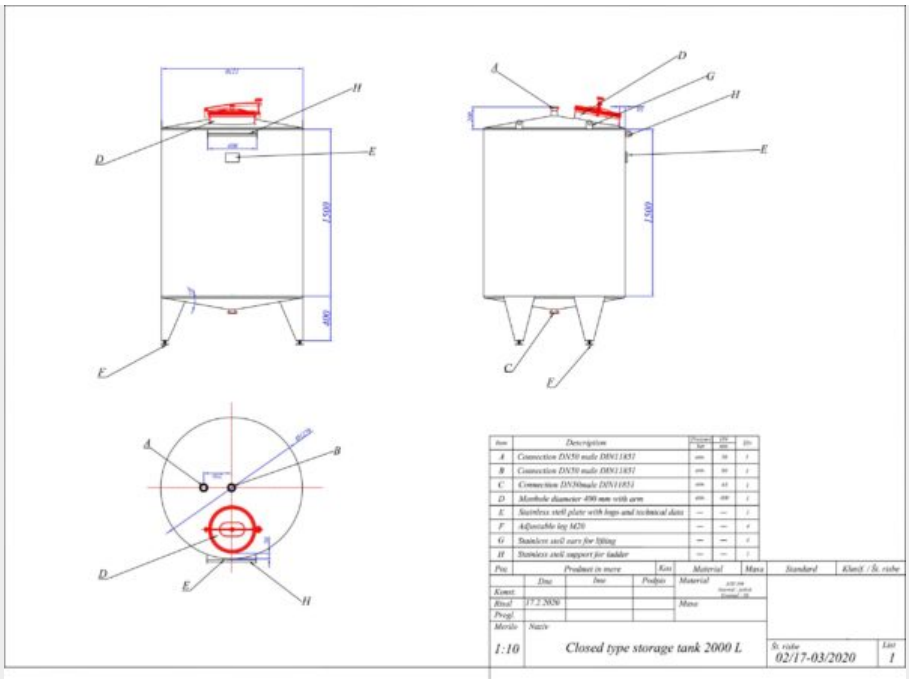


77 000 SEK /st exkl moms

Discover the 2000 liters tank in Syrafast 316 - a robust solution for industry. With a capacity of 2000 liters, made of Syrafast 316, brand new, model Vertical ensures high reliability. Contact us for more information.

**SKU:** 478508



Rodervägen 57
891 78 Bonässund
info@processoverskott.se

# Mer information

**Product Description**

Food-grade: Yes
Material: Acid-resistant 316
Model: Vertical
New / Used: Newly manufactured
Operating Pressure in Tank: ATM – atmospheric
Stainless steel finish: 2b
Mobile Tank: No, it is not.
Övrig information: These tanks have about 3 months delivery time.
Agitator: No
Tank Shape: cylindrical
Complete Drainage: Yes
Heating / Cooling: No
Contact Surface: SS AISI 316 (V4A)
Volume in liters: 2000

**Equipment**

Nameplate: Yes
Food-grade: Yes
Tank Outlet: inside Ø 60 mm
Outlet Type: DIN 11851

**Material Overview**

Material: Acid-resistant 316

**Tank Dimensions**

Cylinder Height: 1.500 mm
Height on legs: 400 mm
Total Height: 2.500 mm

**PROCESSÖVERSKOTT AB**

Rodervägen 57
891 78 Bonässund
info@processoverskott.se

Läs våra köpvillkor

**Mer**
Isolated: No

**PROCESSÖVERSKOTT AB**

Rodervägen 57
891 78 Bonässund
info@processoverskott.se

Läs våra köpvillkor