# 5000 liter tank in 304 stainless steel

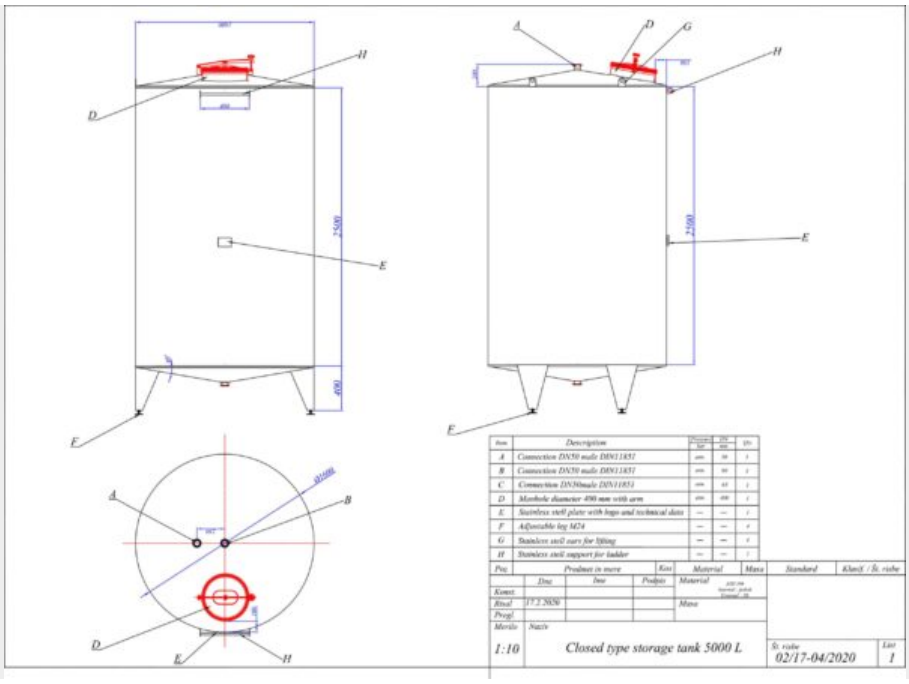


107 000 SEK /st exkl moms

5000 liters tank in Stainless 304 is a reliable tank for industrial needs. It holds 5000 liters, is made of 304 stainless steel and provides high reliability. Ideal for professional use.

**SKU:** 480707



Rodervägen 57
891 78 Bonässund
info@processoverskott.se

# Mer information

**Product Description**

Food-grade: Yes
Material: Stainless steel 304
Model: Vertical
New / Used: Newly manufactured
Operating Pressure in Tank: ATM – atmospheric
Stainless steel finish: 2b
Configuration: single-skin
Mobile Tank: No, it is not.
Övrig information: These tanks have about 3 months delivery time.
Agitator: No
Tank Shape: cylindrical
Complete Drainage: Yes
Heating / Cooling: Yes
Contact Surface: SS AISI 304 (V2A)
Volume in liters: 5000

**Equipment**

Nameplate: Yes
Food-grade: Yes
Tank Outlet: inside Ø 60 mm
Outlet Type: DIN 11851

**Material Overview**

Material: Stainless steel 304

**PROCESSÖVERSKOTT AB**

Rodervägen 57
891 78 Bonässund
info@processoverskott.se

Läs våra köpvillkor

**Tank Dimensions**

Cylinder Height: 2.500 mm
Height on legs: 400 mm
Total Height: 3.100 mm
Outer diameter: 1.600 mm

**Mer**

Isolated: No

**PROCESSÖVERSKOTT AB**

Rodervägen 57
891 78 Bonässund
info@processoverskott.se

Läs våra köpvillkor