5000 liter tank in Acid-proof 316

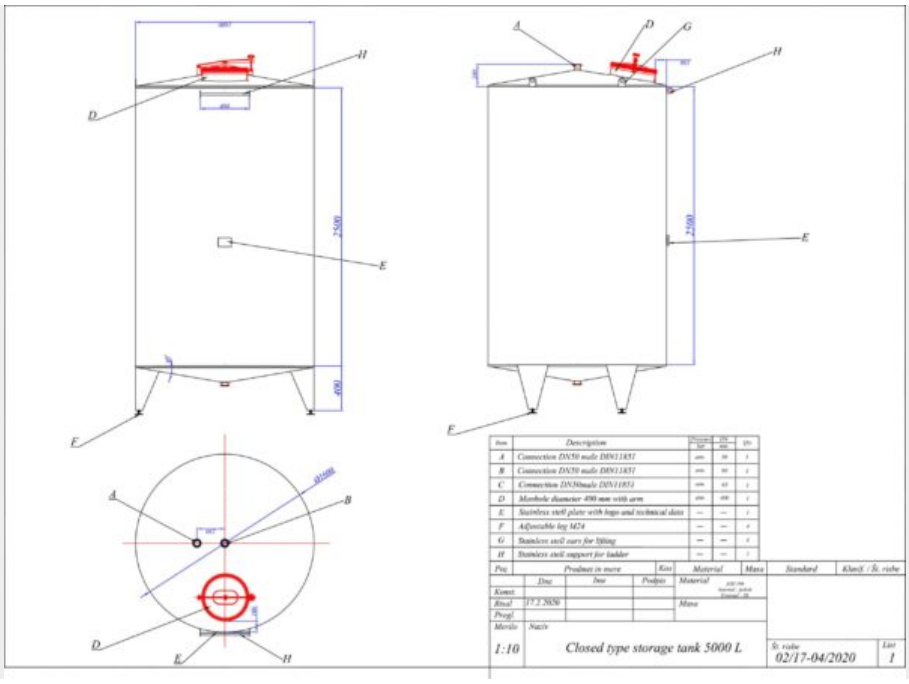

109 000 SEK /st exkl moms

Discover the 5000 liters tank in Syrafast 316 - a robust solution for industry. With a capacity of 5000 liters, made in Syrafast 316, high operational reliability is ensured. Order easily online today.

SKU: 480683

Rodervägen 57
891 78 Bonässund
info@processoverskott.se

Mer information

Product Description

Food-grade: Yes
Material: Acid-resistant 316
Model: Vertical
New / Used: Newly manufactured
Operating Pressure in Tank: ATM – atmospheric
Stainless steel finish: 2b
Configuration: single-skin
Mobile Tank: No, it is not.
Övrig information: These tanks have about 3 months delivery time.
Agitator: No
Tank Shape: cylindrical
Complete Drainage: Yes
Heating / Cooling: No
Contact Surface: SS AISI 316 (V4A)
Volume in liters: 5000

Equipment

Nameplate: Yes
Food-grade: Yes
Tank Outlet: inside Ø 60 mm
Outlet Type: DIN 11851

Material Overview

Material: Acid-resistant 316

Rodervägen 57
891 78 Bonässund
info@processoverskott.se

Tank Dimensions

Cylinder Height: 2.500 mm
Height on legs: 400 mm
Total Height: 3.100 mm
Outer diameter: 1.600 mm

Mer

Isolated: No

PROCESSÖVERSKOTT AB

Rodervägen 57
891 78 Bonässund
info@processoverskott.se

Läs våra köpvillkor