5400 liters tank in Stainless 304

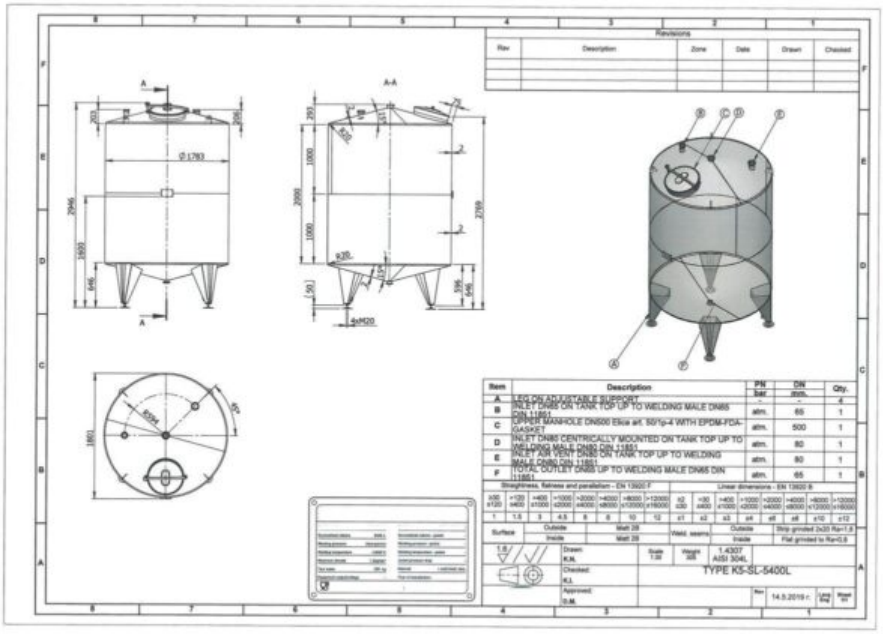

127 000 SEK /st exkl moms

item available on order

Article type: brand new storage tank - type K5-SL
Additional information: inner surface 0.8µ
Volumetric volume (L): 5.400 L
Max. density P (kg/m³): 1.200
Ra inner weld: 0,80

Finish stainless steel: 2B
Pressure in tank: ATM - atmosferic
Max. temperature (°C): 100 °C
Min. temperature (°C): -10 °C

PROCESSÖVERSKOTT AB

Rodervägen 57
891 78 Bonässund
info@processoverskott.se

Läs våra köpvillkor

Material wet parts: SS AISI 304L (V2A)

Model: vertical
Configuration: single-skin
Heat exchanger: no
Insulation: no
Mobile tank: no

Top type: conical 15 °
Shape of tank: cylindrical
Bottom type: conical 15 °
Total discharge: yes
Fixation points: 4 adjustable feet

Legs: Set of baseplates and adjusting pieces included
Manway(s): RVS 304L
Gasket manway(s): EPDM
Fixation point(s): RVS 304L
Suitable for food industry: yes

Documents included: yes, optional
Technical drawing included: yes
Registration plate on the tank: yes
Inspection of: TUV
Flange for agitator: no

Number of manways: 1
Position of manway: at the top
Height manhole 1 (mm): 500 mm
Tank outlet: inside Ø 65 mm
Outlet type: DIN11851 male

Total outlet valve: no, optional
Top: 2 mm
Cylinder: 2 mm
Bottom: 2 mm
Distance from outlet to ground: 306 mm

Outer diameter tank: 1.783 mm
Cylinder height: 2.000 mm

PROCESSÖVERSKOTT AB

Rodervägen 57
891 78 Bonässund
info@processoverskott.se

Läs våra köpvillkor

Feet height: 646 mm
Total height of tank: 3.000 mm
Empty weight tank: 312

SKU: 381185

Mer information

Product Description

Food-grade: Yes
Material: Stainless steel 304
Model: Vertical
New / Used: Newly manufactured
Operating Pressure in Tank: ATM – atmospheric
Stainless steel finish: 2b
Configuration: single-skin
Max. Service Temperature: 100 °C
Maximum Product Density: 1200
Min. Operating Temperature: -10 °C
Mobile Tank: No, it is not.
Övrig information: inner surface 0.8µ
Agitator: No
Ra Internal Weld: 0,80
Tank Shape: cylindrical
Complete Drainage: Yes
Bottom Type: conical 15 °
Heating / Cooling: No
Contact Surface: SS AISI 304L (V2A)
Volume in liters: 5400

Rodervägen 57
891 78 Bonässund
info@processoverskott.se

Equipment

Agitator flange: No
Nameplate: Yes
Food-grade: Yes
Inspected by: TUV
Tank Outlet: inside Ø 65 mm
Technical Drawing Available: Yes
Outlet Type: DIN11851 male

Material Overview

Material: Stainless steel 304
Fixing point(s): RVS 304L

Tank Dimensions

Cylinder Height: 2,000 mm
Height on legs: 646 mm
Outlet Height to Ground: 306 mm
Total Height: 3,000 mm
Outer diameter: 1.783 mm

Tjocklek på tank

Bottom: 2 mm
Cylinder: 2 mm
Top: 2 mm

Mer

Isolated: No
Weight: 312

PROCESSÖVERSKOTT AB

Rodervägen 57
891 78 Bonässund
info@processoverskott.se

Läs våra köpvillkor